ALL GREEN LIGHTING, INC.

CANIS-J Series

Product Description:

The CANIS-J Series is a strong alternative to traditional troffer lights with up to 80% energy savings. It has astrong aluminum frame that is anti-corossive and provides quick heat dissapation. The CANIS-J utilizes a LGP lens that is ultra-thin, provides uniform lighting and good insulation. The LGP lens has prominent aging resistance and chemical stability thus insuring anti-yellowing over the luminaires lifespan.

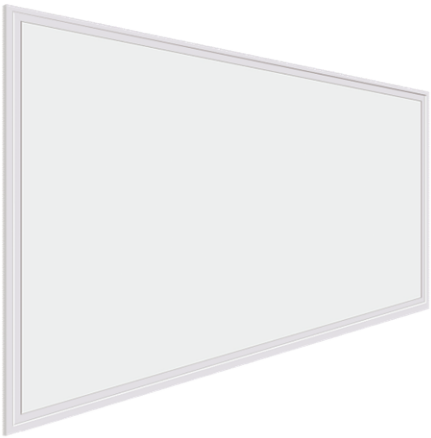

Features:

- **Application:** LED Flat Panel
- **Installation:** Ceiling / Recessed / Suspended
- **Warranty:** 5 Years
- **Operating Temperature:** -22˚F ~+ 122˚F
- **CRI:** >80

Technical Data:

Certifications	UL
CRI	≥ 80
IP Rating	IP40
CCT	2700K-6500K
Input Voltage	100-277V

Specifications:

Fixture Model	Total Lumens	Efficacy (lm/w)	Dimensions (inches)	Weight (lbs)	Beam Angle
CANIS-J 36W-2X2	3,960 lm	110-120 lm/W	23.7 x 23.7	8.14	120˚
CANIS-J 40W-2X2	4,400 lm	110-120 lm/W	23.7 x 23.7	8.14	
CANIS-J 45W-2X2	4,950 lm	110-120 lm/W	23.7 x 23.7	8.14	
CANIS-J 40W-1X4	4,400 lm	110-120 lm/W	11.8 x 47.7	8.36	
CANIS-J 45W-1X4	4,950 lm	110-120 lm/W	11.8 x 47.7	8.36	
CANIS-J 50W-2X4	5,500 lm	110-120 lm/W	23.7 x 47.7	15.84	
CANIS-J 60W-2X4	6,600 lm	110-120 lm/W	23.7 x 47.7	15.84	
CANIS-J 72W-2X4	7,920 lm	110-120 lm/W	23.7 x 47.7	15.84	

Photometrics:

CANIS-J 40W-4K

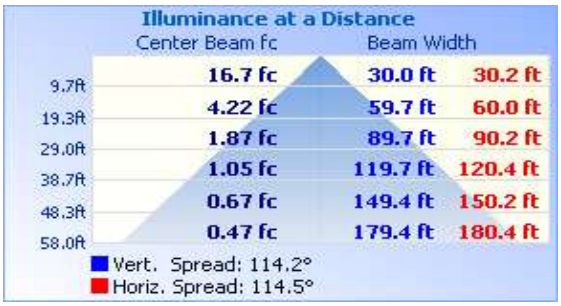

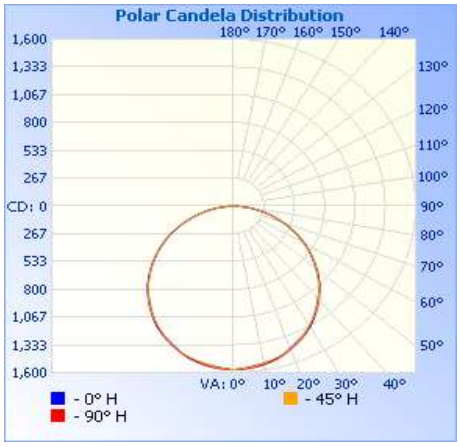

Dimensions:

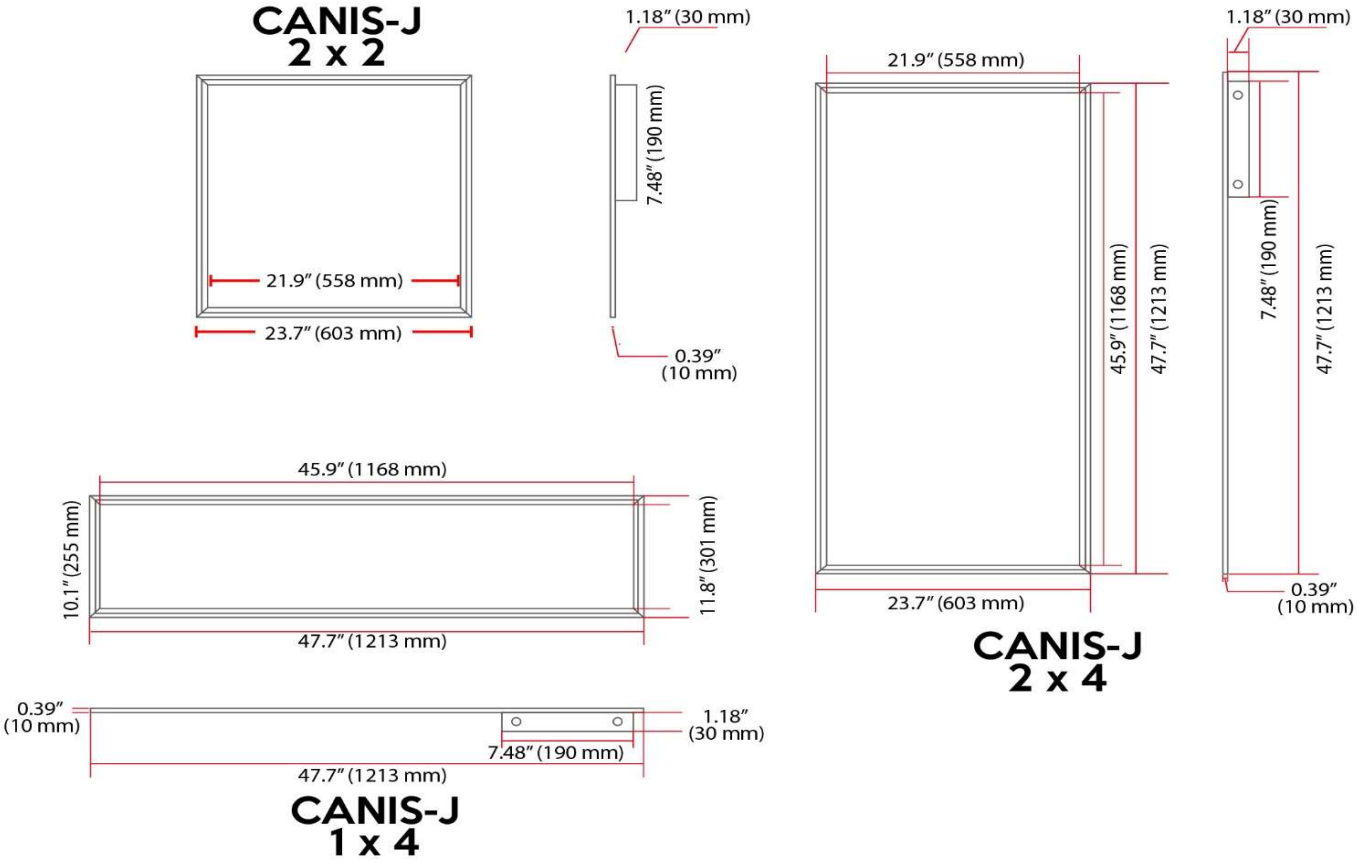

Suspended Mount (Optional):

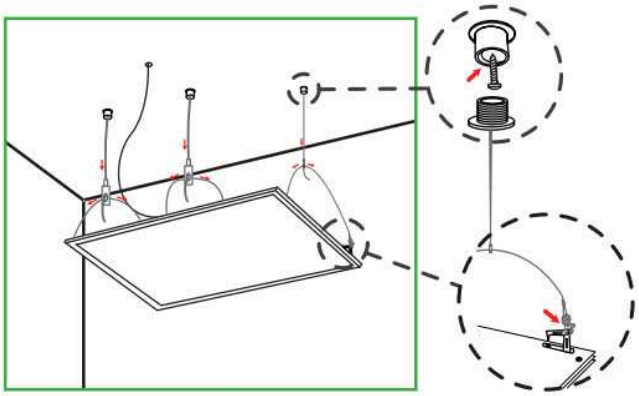

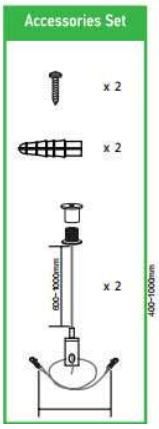

Emergency Battery:

Rated input voltage（100-277V AC）.
Meets most safety standards for lighting.
Main power built-in 3 in 1 dimming function(0-10V/10v PWM/1-100kΩ Resistance).
Low ripple and noisy, Non-Flicker.
Main power output current can be regulated by potentionmeter.
Main power protections : OCP/SCP/OVP.
Built-in lithium battery as an emergency power supply energy.
Emergency protections : OVP/LVP SCP/ TVP.
Intelligent emergency automatic detection function.
Emergency working time≥ 90 minute.
Product warranty: 5 years.

Charged: Red LED Main Power : Green LED Malfunction: Yellow LED

Display status when working

Operating Condition	Main Power	Charged	Malfunction	Light
Light ON	ON	Slow Flash/OFF	OFF	ON
Emergency work	OFF	ON	OFF	ON
Light OFF	ON / Breathing lamp	Slow flash / OFF	OFF	OFF

1 When the red LED flashes and the green LED lits, indicate that it is on charge.

2 When the red LED went out and the green LED breathe, indicate that electricity is full.

Non normal working state

Operating Condition	Main Power	Charged	Malfunction	Light
No AC and Battery out	OFF	OFF	OFF	OFF
No AC and Battery low	OFF	Fast Blink	OFF	ON
Battery not Connected	--	--	Fast Blink	--
Power Fault	--	--	ON	OFF

- This product should be installed by trained electricians. Forbid connecting wires when power is on,make power on after make sure that there is no phenomenon of short circuit and the correction is ok.
- The wall switch only controls the main power, no function on emergency lighting.
- Green light-main power, Red light-charging, Yellow light-malfunction; Test: test button
- No indicator works in emergency status.
- Frequently test is prohibited. Each test interval is not less than one minute.

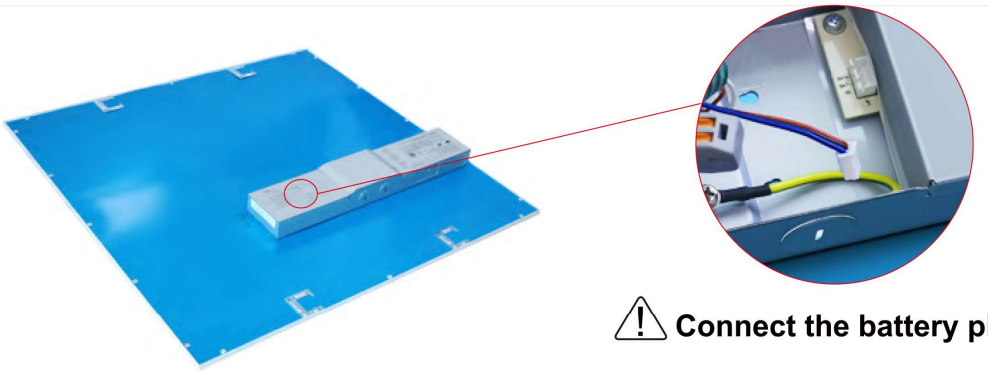

Connect the battery plug before wiring.

Wire connection

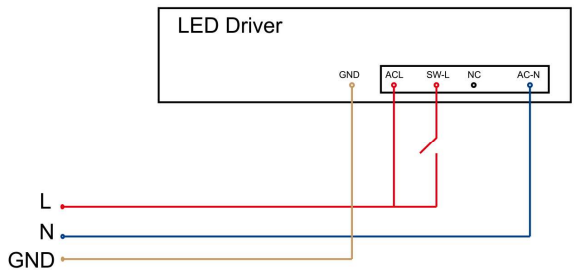

Dimmer Wire connection

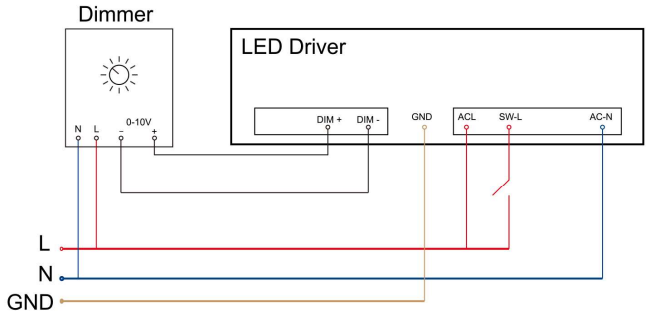

Charging time < 24 hours

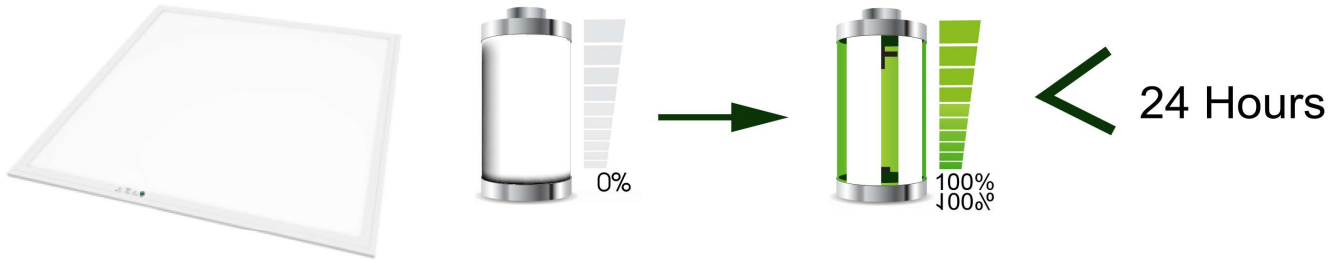

Emergency lighting time ≥ 120mins

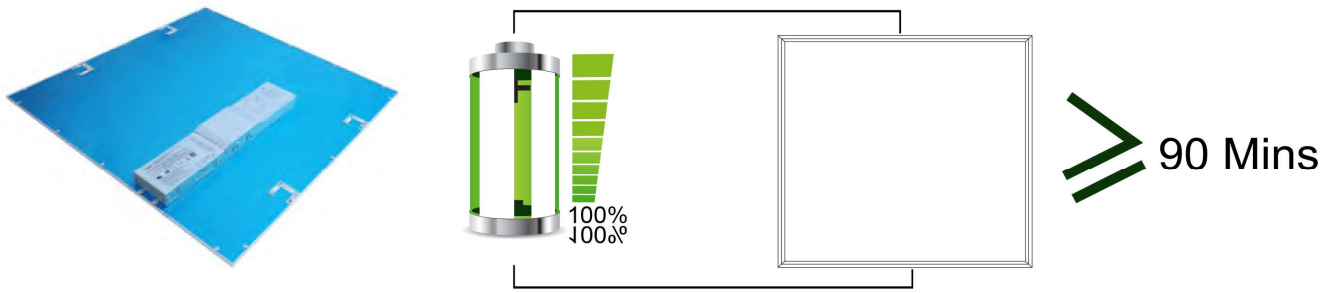

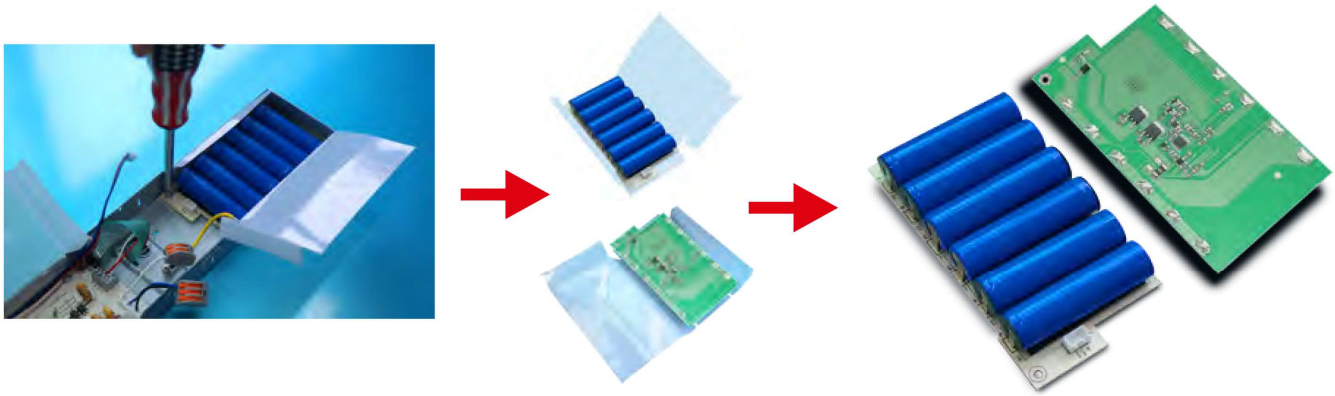

The battery pack can be disassembled separately with easy replacement, preparing one or more sets as replacements to increase the service life of emergency backup panel.

Battery	Battery capacity	Emergency power Max	Emergency current	Emergency time	Pack rating Voltage	300 cycles of standard CH and standard DC
4 pcs	2000mA *4	10W	300 mA	≥90minute	14.4V	300cycles
6 pcs	2000mA *6	17W	500 mA	≥90minute	10.8V	300cycles

Ordering Guide:

CANIS-J 40W-1X4	100-277V	WH	40K	Ceiling	DM	120°	EB
Model: **36W**-2x2 **50W**-2x4 **40W**-2x2 **60W**-2x4 **45W**-2x2 **72W**-2x4 **40W**-1x4 **45W**-1x4	**Input Voltage:** 100-277V	**Mounting Frame Color:** WH: White	**CCT:** 27K 30K 35K 40K 45K 50K 57K 65K	**Mounting:** Ceiling Recessed Suspended	**Driver:** **DM:** Dimmable	**Beam Angle:** 120°	**Optional Accessories:** EB: Emergency Ballast